640751-1 ✔ ACTIVE

Appliance Connectors

TE Internal #: 640751-1

Special Purpose Terminals, Heavy Duty, Unplated Plating, Loose Piece, -40 – 200 °C [-40 – 356 °F], Appliance Connectors

View on TE.com >

Terminals & Splices > Special Purpose Terminals

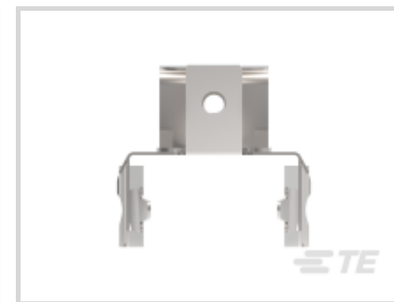
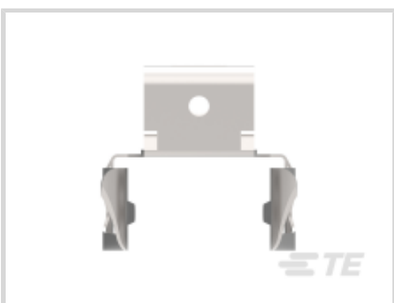

Heavy Duty: **Yes**

Terminal Material Thickness: **.51 mm [.02 in]**

Terminal Plating Material: **Unplated**

Packaging Method: **Loose Piece**

Sealable: **No**

Features

Product Type Features

Sealable	No

Contact Features

Terminal Plating Material	Unplated

Dimensions

Terminal Material Thickness	.51 mm[.02 in]

Usage Conditions

Operating Temperature Range	-40 – 200 °C[-40 – 356 °F]

Operation/Application

Heavy Duty	Yes

Packaging Features

Packaging Quantity	1
Packaging Method	Loose Piece

Product Compliance

For compliance documentation, visit the product page on TE.com>

EU RoHS Directive 2011/65/EU	Compliant
EU ELV Directive 2000/53/EC	Compliant
China RoHS 2 Directive MIIT Order No 32, 2016	No Restricted Materials Above Threshold
EU REACH Regulation (EC) No. 1907/2006	Current ECHA Candidate List: JUNE 2022 (224) Candidate List Declared Against: JUNE 2022 (224) Does not contain REACH SVHC
Halogen Content	Low Halogen - Br, Cl, F, I < 900 ppm per homogenous material. Also BFR/CFR/PVC Free
Solder Process Capability	Not applicable for solder process capability

Product Compliance Disclaimer

This information is provided based on reasonable inquiry of our suppliers and represents our current actual knowledge based on the information they provided. This information is subject to change. The part numbers that TE has identified as EU RoHS compliant have a maximum concentration of 0.1% by weight in homogenous materials for lead, hexavalent chromium, mercury, PBB, PBDE, DBP, BBP, DEHP, DIBP, and 0.01% for cadmium, or qualify for an exemption to these limits as defined in the Annexes of Directive 2011/65/EU (RoHS2). Finished electrical and electronic equipment products will be CE marked as required by Directive 2011/65/EU. Components may not be CE marked. Additionally, the part numbers that TE has identified as EU ELV compliant have a maximum concentration of 0.1% by weight in homogenous materials for lead, hexavalent chromium, and mercury, and 0.01% for cadmium, or qualify for an exemption to these limits as defined in the Annexes of Directive 2000/53/EC (ELV). Regarding the REACH Regulation, the information TE provides on SVHC in articles for this part number is based on the latest European Chemicals Agency (ECHA) 'Guidance on requirements for substances in articles' posted at this URL: https://echa.europa.eu/guidance-documents/guidance-on-reach

Compatible Parts

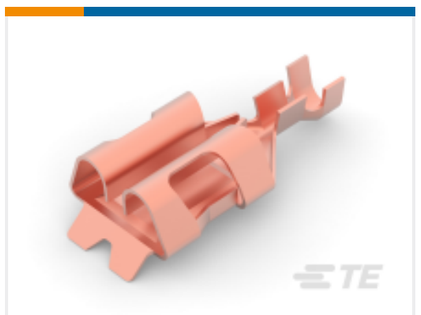

TE Part # 640748-7
HEAVY DUTY BURNER REC 18-14 AWG PHBRZ

TE Part # 1969726-1
2P HEAVY DUTY BURNER HSG

Also in the Series | Appliance Connectors

Crimp Terminal Housings(1)

Special Purpose Terminals(10)

Documents

Product Drawings

HEAVY DUTY BURNER CLIP ST

English

CAD Files

3D PDF

3D

Customer View Model

ENG_CVM_CVM_640751-1_AK.2d_dxf.zip

English

Customer View Model

ENG_CVM_CVM_640751-1_AK.3d_igs.zip

English

Customer View Model

ENG_CVM_CVM_640751-1_AK.3d_stp.zip

English

By downloading the CAD file I accept and agree to the Terms and Conditions of use.

Product Specifications

Product Specification

English

Agency Approvals

UL Report

English